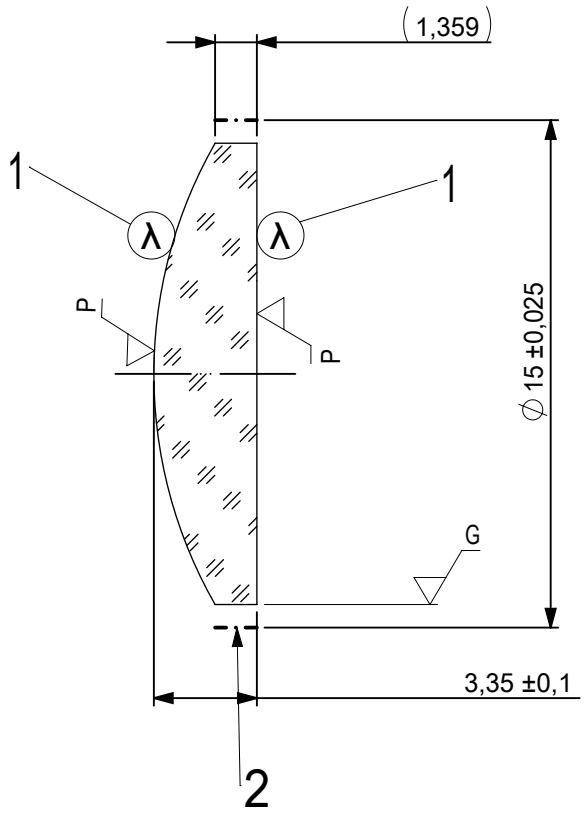

FOCAL LENGTH (EFL): 22,5 ±0,23

BACK FOCAL LENGTH (BFL): 20,5

1 AR COATING: YAG-BBAR
R(ABS) < 0,25% @ 532nm @ 0° AOI
R(ABS) < 0,25% @ 1064nm @ 0° AOI
R(AVG) < 1,0% FROM 500-1100nm @ 0° AOI

2 BLACKENED SURFACE

LEFT SURFACE	MATERIAL	RIGHT SURFACE
R 15,12±0,015 CX	GLASS N-SF5 673/322	R ∞ PL
Øe 14		Øe 14
3/ 3 (0,5) λ=632,8 nm		3/ 3 (0,5) λ=632,8 nm
4/ -		4/ 1,49'
5/ 40 - 20 (MIL-PRF-13830B)		5/ 40 - 20 (MIL-PRF-13830B)
6/ -		6/ -

PROTECTIVE CHAMFERS AS NEEDED		FIRST ANGLE PROJECTION	Edmund Optics®
ROHS: COMPLIANT	SCALE: NONE	λ = 587,6nm	
SPECIFICATIONS SUBJECT TO CHANGE WITHOUT NOTICE. DIMENSIONS ARE FOR REFERENCE ONLY			TITLE: 15,0mm Dia, x 22,5mm FL, Inked, YAG-BBAR Coated Plano-Convex Lens
FOR INFORMATION ONLY: DO NOT MANUFACTURE PARTS TO THIS DRAWING		ALL DIMS IN: mm	
INDICATIONS IN ACCORDANCE WITH ISO 10110			DWG NO: 88855INK; SHEET SIZE: A4; SHEET 1 OF 1