See all 12 Products in Family

100X T0.7 Mitutoyo LCD Plan Apo NIR HR Infinity Corrected Objective

See More by Mitutoyo

Stock **#23-602** **1 In Stock**

- 1 + **C$25,956**.00

ADD TO CART

Volume Pricing	
Qty 1+	**C$25,956.00** each
Need More?	Request Quote

Product Downloads

General

Model Number:
378-870-15

Compatible Tube Lens Focal Length (mm):
Focal Length: 200mm

Type:
Microscope Objective

Style:
Infinity Corrected

Manufacturer:
Mitutoyo

Note:
0.7mm thick LCD cover-glass
Example Application: High magnification inspection through liquid crystal glass (LCD) or cutting and trimming of semiconductor wafer and circuits

Physical & Mechanical Properties

Length excluding Threads (mm):
85.13

Maximum Diameter (mm):
39

Weight (g):
490.00

Optical Properties

Compatible Cover Glass Thickness (mm):
0.7

Design Wavelength DWL (nm):
532, 1064

Horizontal Field of View, 1/2" Sensor:
0.06mm

Horizontal Field of View, 2/3" Sensor:
0.09mm

Focal Length FL (mm):
2.00

Magnification:
100X

Numerical Aperture NA:
0.70

Resolving Power (µm):
0.4

Depth of Field (µm):
0.70

Field of View, 24 Diameter Field Eyepiece (mm):
0.24

Field of View, 18 Diameter Field Eyepiece (mm):
0.18

Working Distance (mm):
9.87

Wavelength Range (nm):
480 - 1800

Parfocal Length (mm):
95.24

Immersion Liquid:
N/A

Sensor

Maximum Sensor Format:
2/3"

Threading & Mounting

Mounting Threads:
M26 x 36 TPI

Environmental & Durability Factors

Performance Assurance Temperature (°C):
23 ±2

Regulatory Compliance

RoHS 2015:
Exempt

Certificate of Conformance:
View

REACH 241:
Contains SVHC(s)

Product Details

- Ideal for Brightfield Imaging and Laser-Based Applications through LCD Glass
- Excellent Performance at Nd:YAG Laser Lines
- Compensate for Cover-Glass Thickness of 0.7mm or 1.1mm

Mitutoyo NIR, NUV, and UV LCD Infinity Corrected Objectives combine the benefits of the standard M Plan Apo and M Plan Apo SL series objectives with enhanced spectral ranges. The NIR objectives are corrected from 480 to 1800nm, making them ideal for semiconductor and telecommunication inspection, or for laser cutting with common Nd:YAG lasers. The HR series offers an increased numerical aperture, providing smaller spot sizes and higher

resolution. Mitutoyo NIR, NUV, and UV LCD Infinity Corrected Objectives compensate for common LCD glass thicknesses. The NUV and UV series of objectives have excellent performance at the second, third, and fourth Nd:YAG harmonics of 532nm, 355nm, and 266nm respectively.

Technical Information

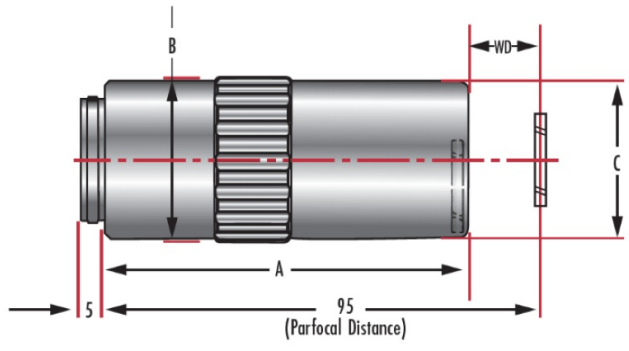

Units: mm

Dimensions

M Plan NIR	A (mm)	B (mm)	C (mm)	W.D. (mm)
20X, T0.7	75.00	34	32.2	20.0
20X, T1.1	75.02	34	32.2	19.98
50X, T0.7	78.04	34	32.2	17.26
50X, T0.7 HR	77.74	34	32.2	9.60
50X, T1.1	77.87	34	32.2	17.13
100X	82.94	34	32.2	12.06
HR 100X	85.13	39	37	9.87
M Plan NUV	**A (mm)**	**B (mm)**	**C (mm)**	**W.D. (mm)**
20X, T0.7	78	34	32.2	16.96
50X, T0.7	80	34	32.2	14.76
100X, T1.1	83.97	34	32.2	11.03
M Plan UV	**A (mm)**	**B (mm)**	**C (mm)**	**W.D. (mm)**
20X, T0.7	80	34	32.2	14.98
50X, T0.7	83	34	32.2	12.38

;