See all 2 Products in Family

TECHSPEC® 12X Eyepiece Cell Assembly

Stock **#45-587** **16 In Stock**

- 1 + **C$130.20**

ADD TO CART

Volume Pricing	
Qty 1+	**C$130.20** each
Need More?	Request Quote

Product Downloads

Physical & Mechanical Properties

Eye Relief (mm):
10.92

Field of View (inches):
0.39

Optical Properties

Distortion (%):
3.20

Effective Focal Length EFL (inches):
0.91

Magnification:

12X

Working Distance (inches):

0.55

Regulatory Compliance

Certificate of Conformance:

View

Product Details

- Ideal for OEM and System Integration
- Used as Eyepieces or Magnifiers
- Various Magnifications Available

In response to continuing demand, Edmund Optics developed these eyepiece cell assemblies for OEM and system integration. The flexibility of the design makes these highly effective as either eyepieces or magnifiers. The 9X and 12X cells offer a three-element Kellner-type design, providing excellent aberration correction. The 6X model has a precision single-element DCX lens. Prescription information available upon request. Please complete a **Request for Prescription Form**.

Lock Ring has internal 1"-20 TPI thread in order to thread onto one of the TECHSPEC® Eyepiece Cell Assemblies for fixing the focus position of the Eyepiece within the Eyepiece Cell Adapter. Lock Ring is 4mm long and has 29mm outer diameter.

Technical Information

Stock No.	A	B	C	D	E
#45-585	1.211"	0.961"	0.875"	0.813"	0.094"
#45-586	1.031"	0.750"	0.853"	0.925"	0.125"
#45-587	1.031"	0.750"	0.853"	0.925"	0.125"

TECHSPEC® EYEPIECE CELL ASSEMBLIES

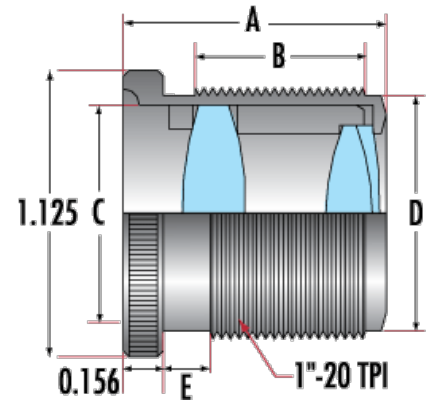

;