TECHSPEC® 25mm Dia. x 30mm FL, VIS Coated, Hybrid Asphere

TECHSPEC® Plastic Hybrid Aspheric Lenses

Stock **#66-003** CLEARANCE **20+ In Stock**

Other Coating Options

- 1 + **C$106**.40

ADD TO CART

Volume Pricing	
Qty 1+	**C$106.40** each
Need More?	Request Quote

Product Downloads

SPECIFICATIONS

General

Type:
Aspheric Lens

Physical & Mechanical Properties

Diameter (mm):

25.00 +0.00/-0.10

Clear Aperture CA (mm):
23.00

Edge Thickness ET (mm):
3.6

Center Thickness CT (mm):
7.30 ±0.10

Bevel:
Protective as needed

Shape of Back Surface:
Convex

Optical Properties

Effective Focal Length EFL (mm):
30.00 @ 587.6nm

Numerical Aperture NA:
0.42

Back Focal Length BFL (mm):
25.82

Substrate:
Zeonex E48R

Aspheric Design Wavelength (nm):
587.6

Coating:
BBAR (425-675nm)

Coating Specification:
R_{avg} ≤0.75% @ 425 - 675nm

Surface Quality:
60-40

f/#:
1.2

Radius R_2 (mm):
120

Wavelength Range (nm):
425 - 675

Conjugate Distance:
Infinite

Environmental & Durability Factors

Operating Temperature (°C):
-30 to +70

Regulatory Compliance

RoHS 2015:
Compliant

Reach 209:
Compliant

Certificate of Conformance:
View

PRODUCT DETAILS

- Color-Corrected Plastic Aspheres
- Diffractive Surface Minimizes Chromatic Aberration
- Low-Cost, Molded Design

TECHSPEC® Plastic Hybrid Aspheric Lenses are molded aspheric lenses with diffraction-limited designs that eliminate chromatic aberrations caused by broadband light sources. These hybrid aspheric lenses are ideal for imaging or ophthalmic applications, or for use with tunable lasers or broadband or multispectral illumination sources. The **aspheric lens** eliminates spherical aberration, while the diffractive surface features a negative optical dispersion to yield excellent color correction.

TECHSPEC Plastic Hybrid Aspheric Lenses are similar in performance, but offer several advantages to our **TECHSPEC Aspherized Achromatic Lenses**. Hybrid aspheric lenses feature all-plastic, monolithic designs that are much lighter than comparable aspherized achromatic lenses. These optical lenses are also available in higher numerical apertures. However, plastic hybrid aspheric lenses are limited by the inherent diffraction efficiency of the aspheric surface, yielding lower overall transmission than comparable aspherized achromatic lenses.

These lenses won the 2011 Prism Award for Optics and Optical Components.

TECHNICAL INFORMATION

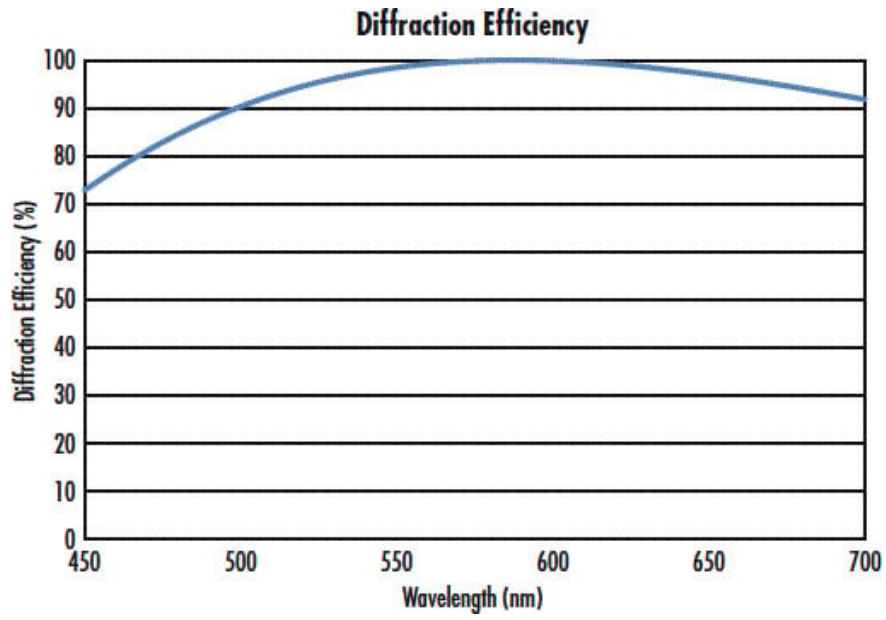

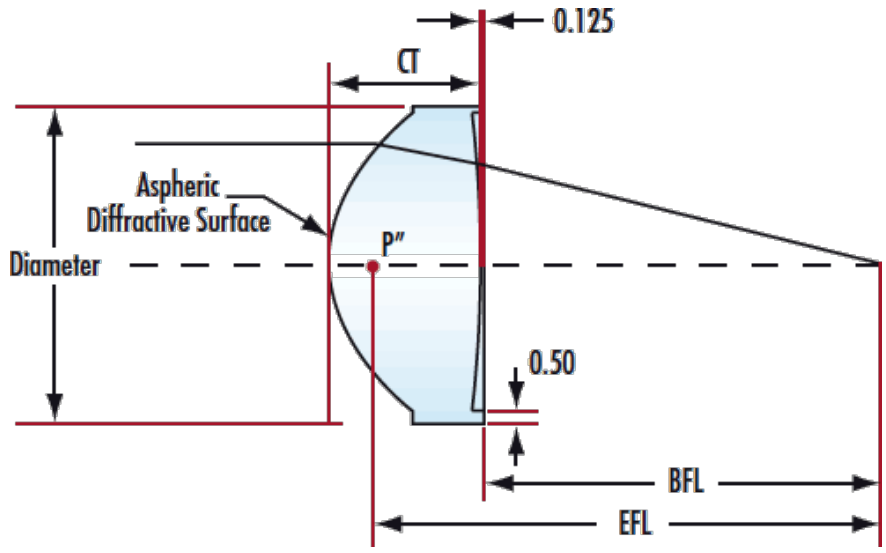

COMPATIBLE MOUNTS