See all 8 Products in Family

E-Series SM2 Adapter

E-Series SM2 Adapter (#18-287)

Stock **#18-287** **20+ In Stock**

- 1 + **C$33.60**

ADD TO CART

Volume Pricing	
Qty 1-9	**C$33.60** each
Qty 10+	**C$32.20** each
Need More?	Request Quote

Product Downloads

General

Type:
Fixed

Physical & Mechanical Properties

Inner Diameter (mm):
SM2

Dimensions (mm):
84 Dia.

Thickness (mm):
19.50

Construction:
Black Anodized Aluminum

Size of Compatible Mount (mm):
76.2mm Dia. Optic Mounts

Regulatory Compliance

RoHS 2015:
Compliant

Certificate of Conformance:
View

Compliant

Reach 250:

Product Details

- Adapt Kinematic or **Fixed Mirror Mounts** into **Tube Threaded Mounts**
- Available with **S-Mount, C-Mount, T-Mount, SM05, SM1, and SM2** Threads
- Thru-Hole Versions Available for **Multi-Element Tube System** Components

E-Series Kinematic Mount Threaded Adapters are a simple way to turn any standard kinematic or fixed mirror mount into a threaded mount. Featuring common threads compatible with our **S-, C-, and T-Mount Tube System**, **ID Tube System**, and **Multi-Element (ME) Tube System**, these adapters allow optical components from 3mm to 50.8mm diameter to be easily integrated with our **E-Series Kinematic Optical Mirror Mounts**. Thru-hole adapters compatible with 30mm C-Mount Barrels, ID1 Lens Tubes, ME Tubes, and **Coherent® StingRay™ and BioRay™ Laser Diode Modules** are also available for added flexibility in building optical systems. E-Series Kinematic Mount Threaded Adapters are a cost-effective solution to add versatility to an optical system.

Technical Information

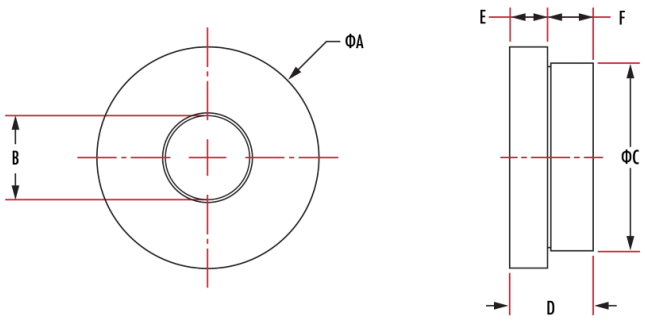

Dimensions (mm)						
Stock Number	**A**	**B**	**C**	**D**	**E**	**F**
18-282	30 Dia.	S-Mount	25.4 Dia.	11.20	5.00	5.70
18-283	56 Dia.	C-Mount	50.8 Dia.	16.50	8.00	8.00
18-284	56 Dia.	T-Mount	50.8 Dia.	16.50	8.00	8.00
18-285	30 Dia.	SM05	25.4 Dia.	11.20	5.00	5.70
18-286	56 Dia.	SM1	50.8 Dia.	16.50	8.00	8.00
18-287	84 Dia.	SM2	76.2 Dia.	19.50	8.00	11.00
18-289	56 Dia.	30	50.8 Dia.	18.50	10.0	8.00
18-291	29.9 Dia.	19.1	25.4 Dia.	21.00	15.00	5.50

;