See all 6 Products in Family

TECHSPEC® Infinite Conjugate, Gold Coated, 15X/0.28NA HP ReflX

High Performance ReflX™ Objectives

Stock **#59-888** **2 In Stock**

- 1 + **C$3,752.00**

ADD TO CART

Volume Pricing	
Qty 1+	**C$3,752.00** each
Qty 2+	**C$3,367.00** each
Need More?	Request Quote

Product Downloads

General

Type:
Microscope Objective

Style:
Infinity Corrected

Manufacturer:
Edmund Optics®

Note:
Requires a 200mm secondary tube lens
Entrance Pupil Position specification is measured in mm from flange

Physical & Mechanical Properties

Diameter of Small Mirror (mm):	8.8
Aperture Diameter (mm):	8.5

Optical Properties

Entrance Pupil Position (mm):	51.8
Horizontal Field of View, 1/2" Sensor:	0.43mm
Horizontal Field of View, 2/3" Sensor:	0.59mm
Focal Length FL (mm):	13.30
Coating:	Protected Gold (700-11000nm)
Magnification:	15X
Numerical Aperture NA:	0.28
Obscuration (%):	27.00
Transmitted Wavefront, RMS:	λ/14
Working Distance (mm):	23.75
Coating Specification:	R_{avg} >96% @ 700 - 11000nm (typical)
Wavelength Range (nm):	700 - 11000

Threading & Mounting

Mount:	RMS

Regulatory Compliance

Certificate of Conformance:	View

Product Details

- Diffraction Limited Performance: Transmitted Wavefront of λ/14 RMS
- Streamlined Tapered Design for Added Clearance at 45° AOI
- Curved Spider Legs to Reduce Diffraction Effects
- **TECHSPEC® Reflx™ Objectives** Available

Our TECHSPEC® High Performance ReflX™ is built on the same design as our **standard ReflX™** with the added benefits of a λ/4 peak-to-valley (P-V) transmitted wavefront and a tapered mechanical design, which permits use at angles of incidence (AOI) up to 45°. Manufacturing reflective objectives that achieve λ/4 P-V transmitted wavefront requires mirror surfaces to be highly accurate. Our precision manufacturing facilities employ a QED Q22-MRF system and QED SSI Sub-Aperture Stitching Interferometer to polish and test our mirrors to surface accuracies of better than λ/20 P-V.

The objectives feature an infinite conjugate design for a 200mm secondary tube lens. For broadband imaging applications, the Mitutoyo MT-L Tube lens, **#56-073**, is recommended. The infinite design allows for the introduction of filters and beamsplitters, making these objectives ideal for biotech and fluorescence applications as well. For focusing applications, the beam should fill the stated entrance pupil diameter of the objective. In either case, it should be noted that the light is obscured, creating an irradiance profile with less energy in the central portion of the beam.

Many applications that use reflective objectives require them aligned at angles of incidence up to 45°. To accommodate these steep angles, the HP ReflX™ has a tapered design that provides >6mm clearance from the object plane. To eliminate the diffraction effects in the image plane caused by straight-legged spider mounts, the HP ReflX® uses a curved leg design. All internal surfaces have been specially treated to eliminate stray light. Each objective is manufactured in the U.S.A., and assembled, tested, and certified on our Zygo GPI-XP interferometer. A certificate of compliance is included with each objective.

For customized versions, including laser coatings and different back tube lengths, please contact our **Applications Engineering Department**.

Technical Information

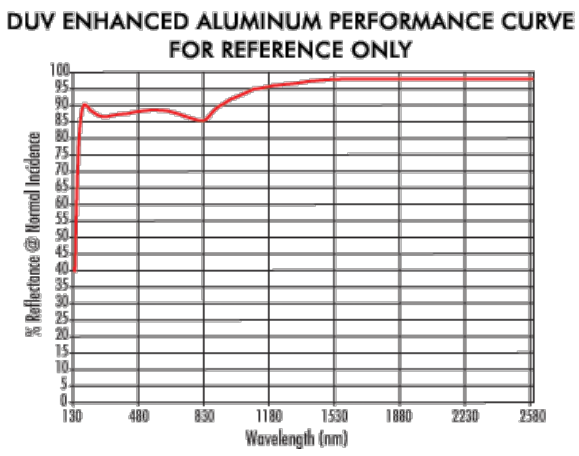

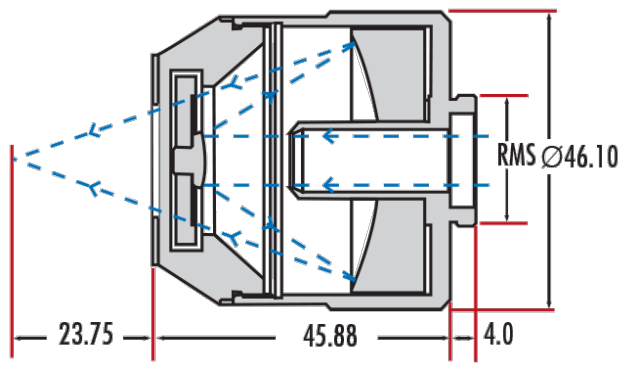
RMS ∅46.10
23.75
45.88
4.0

;