Lower Module w/In-Line Illumination & 5mm Stepper Motorized Focus

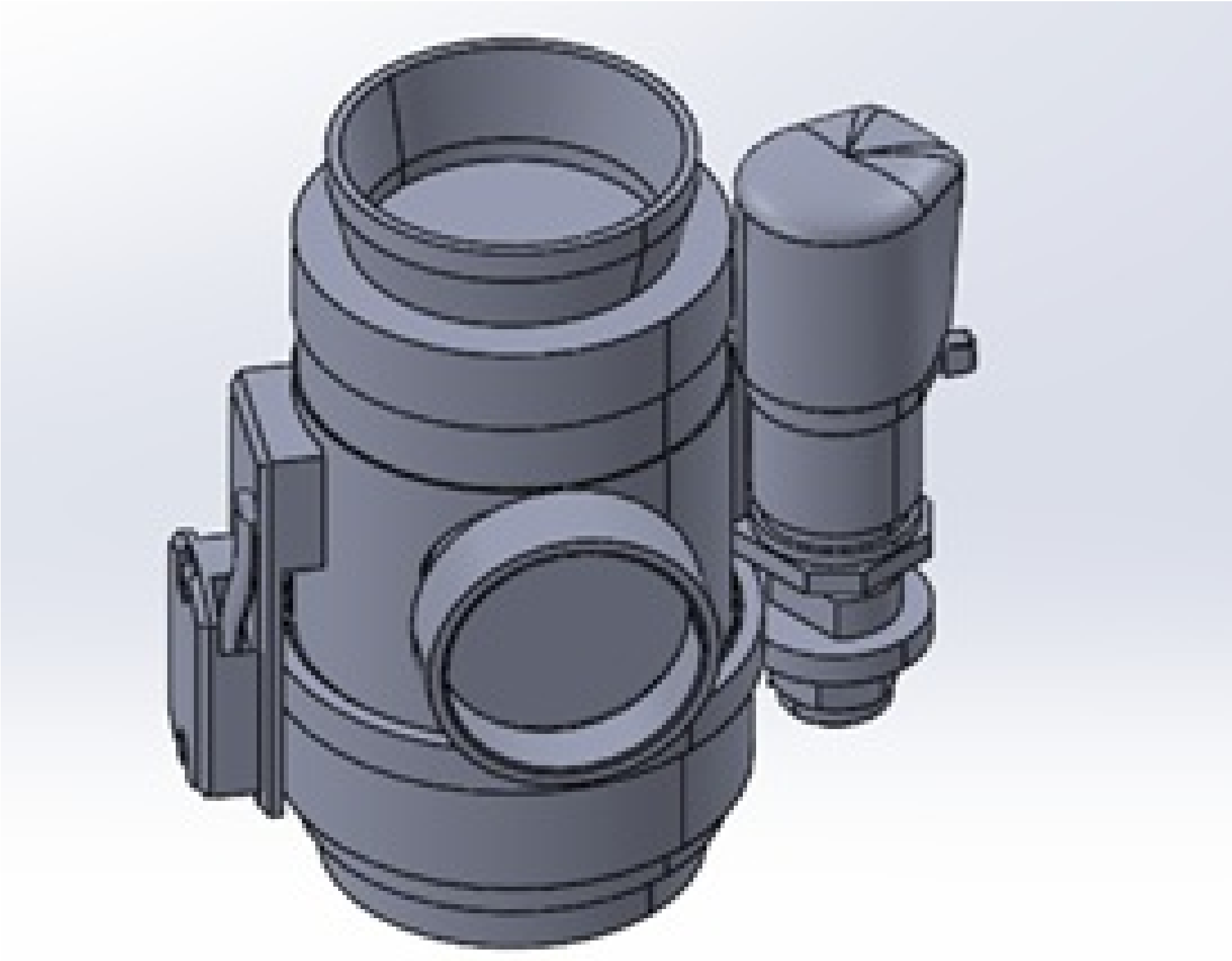

Stock **#89-892** In Stock

- 1 + **C$2,513.00**

ADD TO CART

Qty 1+

C$2,513.00

Volume Pricing

Request Quote

Get Product Downloads

Note:
Lower Function Module (One Required)

Type:
Zoom Lens, Modular

Regulatory Compliance

RoHS 2015:
Compliant

Certificate of Conformance:
View

Reach 235:
Compliant